Your Science Online

Cambridge IGCSE Physics 0625 style

ELECTRICITY

Topic practice paper (exam style)

CANDIDATE NAME	
CLASS	
DATE	

50 minutes

You will need: a pen, a pencil, a ruler and a calculator.

INSTRUCTIONS

- Answer **all** questions.
- Use a black or dark blue pen. You may use an HB pencil for any diagrams or graphs.
- Write your answer to each question in the space provided.
- Do **not** use an erasable pen or correction fluid.
- Do **not** write on any bar codes or in the margins.
- You may use a calculator.
- You should show all your working and use appropriate units.

INFORMATION

- The total mark for this paper is 46.
- The number of marks for each question or part question is shown in brackets [ ].
- Questions or parts marked **[Extended]** are for Extended-tier candidates. Core candidates may leave them out (Core total: 34 marks).
- Topics: charge and current, p.d., resistance, I–V graphs, series and parallel circuits, electrical power and energy, electrical safety and potential dividers.

For teacher's use	
Question	**Mark**
1	
2	
3	
4	
5	
6	
Total	

[Turn over

Original practice questions © Your Science Online (yourscienceonline.com). This is not an official Cambridge paper.

1 A small lamp is connected to a battery. There is a current of 0.40 A in the lamp.

(a) State what is meant by an electric *current*.

.....

..... [1]

(b) Calculate the charge that passes through the lamp in 2.5 minutes.

.....

.....

charge = ... [2]

(c) State the unit of charge.

..... [1]

(d) ***[Extended]*** In another circuit, 360 J of energy is transferred when 60 C of charge passes through a component. Calculate the potential difference (p.d.) across the component.

.....

.....

p.d. = ... V [2]

DO NOT WRITE IN THIS MARGIN

DO NOT WRITE IN THIS MARGIN

2 A student uses the circuit in Fig. 2.1 to measure the resistance of resistor R.

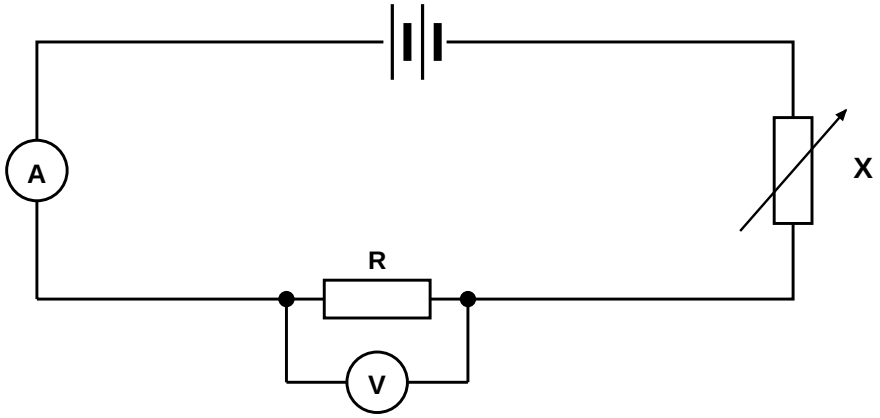

Fig. 2.1

(a) Name the component labelled X and state why it is used in the circuit.

.....

..... [2]

Original practice questions © Your Science Online (yourscienceonline.com). This is not an official Cambridge paper.

(b) The voltmeter reads 6.0 V and the ammeter reads 0.30 A. Calculate the resistance of R.

.....

.....

resistance = ... Ω [2]

(c) The p.d. across R stays at 6.0 V, but R is replaced by a resistor with twice the resistance. State what happens to the current.

..... [1]

(d) R is replaced by a filament lamp. On the axes in Fig. 2.2, sketch the current–voltage (I–V) graph for a filament lamp.

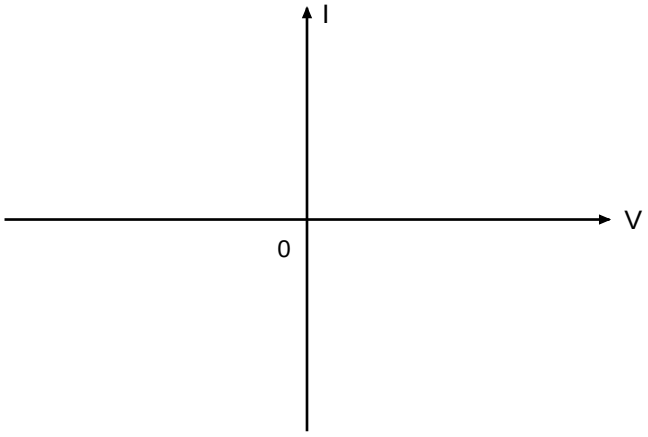

Fig. 2.2

[2]

(e) Explain why the resistance of the filament lamp increases as the current in it increases.

.....

..... [1]

(f) ***[Extended]*** Wire P has a resistance of 4.0 Ω. Wire Q is made of the same metal. Q is twice as long as P and has twice the cross-sectional area. State the resistance of Q. Explain your answer.

.....

.....

resistance of Q = ... Ω [2]

DO NOT WRITE IN THIS MARGIN

DO NOT WRITE IN THIS MARGIN

Original practice questions © Your Science Online (yourscienceonline.com). This is not an official Cambridge paper.

3 Fig. 3.1 shows two resistors connected in series with a 12 V battery.

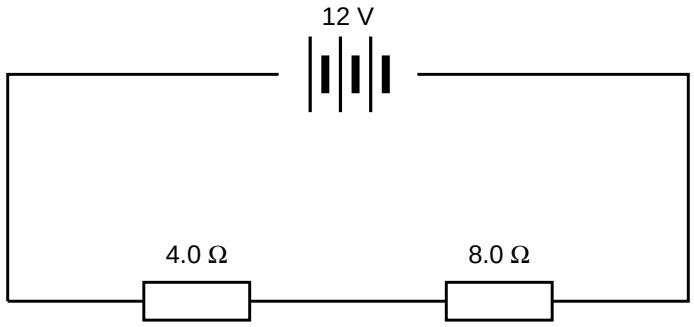

Fig. 3.1

(a) Calculate the combined resistance of the two resistors.

.....

resistance = ... Ω [1]

(b) Calculate the current in the circuit.

.....

.....

current = ... A [2]

(c) Calculate the p.d. across the 8.0 Ω resistor.

.....

.....

p.d. = ... V [2]

DO NOT WRITE IN THIS MARGIN

DO NOT WRITE IN THIS MARGIN

Original practice questions © Your Science Online (yourscienceonline.com). This is not an official Cambridge paper.

Fig. 3.2 shows two 6.0 Ω resistors connected in parallel with a 6.0 V battery.

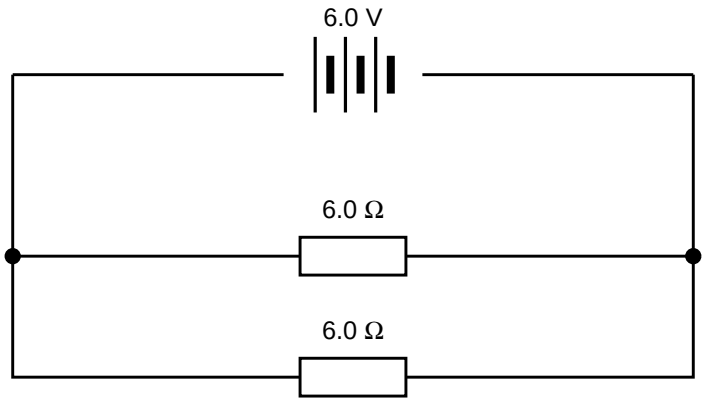

Fig. 3.2

(d) ***[Extended]*** Calculate the combined resistance of the two resistors in parallel.

.....

.....

resistance = ... Ω [2]

(e) State how the current from the battery compares with the currents in the two branches.

..... [1]

4 An electric kettle has a power of 2.0 kW. It is connected to the 230 V mains supply.

(a) Calculate the current in the kettle.

.....

.....

current = ... A [2]

(b) The kettle is switched on for 3.0 minutes. Calculate the energy transferred, in joules.

.....

.....

energy = ... J [2]

DO NOT WRITE IN THIS MARGIN

DO NOT WRITE IN THIS MARGIN

Original practice questions © Your Science Online (yourscienceonline.com). This is not an official Cambridge paper.

(c) Electricity costs 25 cents per kilowatt-hour (kWh). Calculate the cost of using the kettle for 3.0 minutes.

.....

.....

cost = ... cents [2]

(d) The cable of the kettle is thicker than the cable of a table lamp. Explain why.

.....

..... [2]

5 This question is about using mains electricity safely.

(a) State **two** hazards of mains electricity.

1

.....

2

..... [2]

(b) The kettle in Question 4 draws a current of about 9 A. Table 5.1 shows the fuses that are available.

fuse rating / A	3	5	13

Table 5.1

State which fuse should be fitted in the plug of the kettle. Give a reason for your answer.

.....

..... [2]

DO NOT WRITE IN THIS MARGIN

DO NOT WRITE IN THIS MARGIN

Original practice questions © Your Science Online (yourscienceonline.com). This is not an official Cambridge paper.

(c) The kettle has a metal case. A fault makes the live wire touch the metal case. Explain how the earth wire and the fuse protect the user.

.....

.....

.....

..... [3]

(d) State **one** advantage of a circuit breaker compared with a fuse.

..... [1]

6 ***[Extended]*** This question is about electromotive force and potential dividers.

(a) State what is meant by the electromotive force (e.m.f.) of a battery.

.....

..... [2]

Fig. 6.1 shows a potential divider made from a thermistor and a 2.0 kΩ resistor.

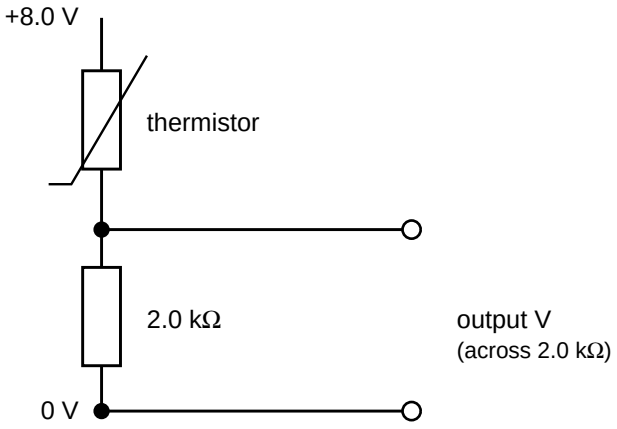

Fig. 6.1

DO NOT WRITE IN THIS MARGIN

DO NOT WRITE IN THIS MARGIN

Original practice questions © Your Science Online (yourscienceonline.com). This is not an official Cambridge paper.

(b) At room temperature the resistance of the thermistor is 6.0 kΩ. Calculate the output voltage across the 2.0 kΩ resistor.

.....

.....

output voltage = ... V [2]

(c) The temperature of the thermistor increases. State and explain what happens to the output voltage.

.....

..... [2]

END OF PAPER

DO NOT WRITE IN THIS MARGIN

DO NOT WRITE IN THIS MARGIN

Original practice questions © Your Science Online (yourscienceonline.com). This is not an official Cambridge paper.